Timestamp 2019.09.19 22:02

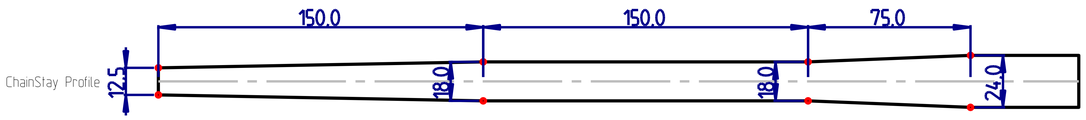


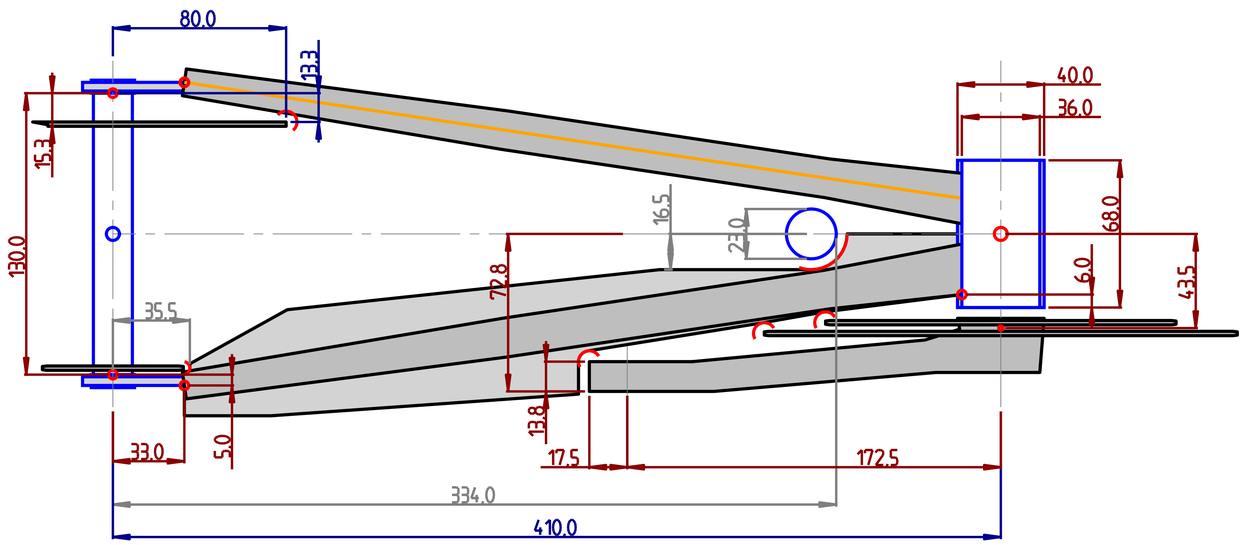


| | | |
|---|---|---|
| A0 | rattleCAD V3.3.0.6.36 | 2019.09.19 22:02 |
| 1:1 | Phil_Adkins_fast-road-final.xml | |

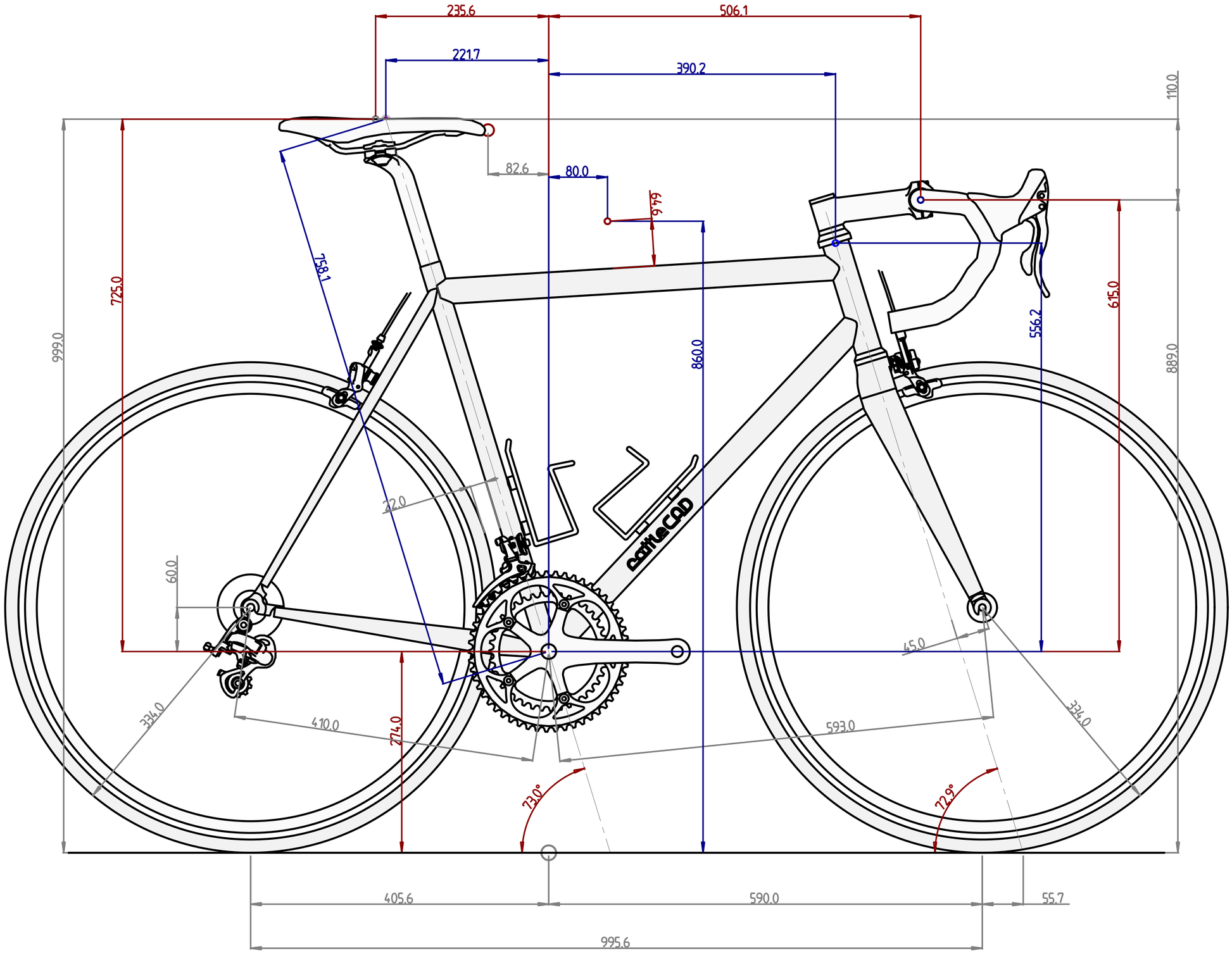
235.6
506.1
221.7
390.2
110.0
82.6
80.0
9.49
758.1
725.0
999.0
860.0
556.2
615.0
889.0
22.0
60.0
45.0
334.0
410.0
274.0
593.0
334.0
73.0°
72.9°
405.6
590.0
55.7
995.6
raiteCAD

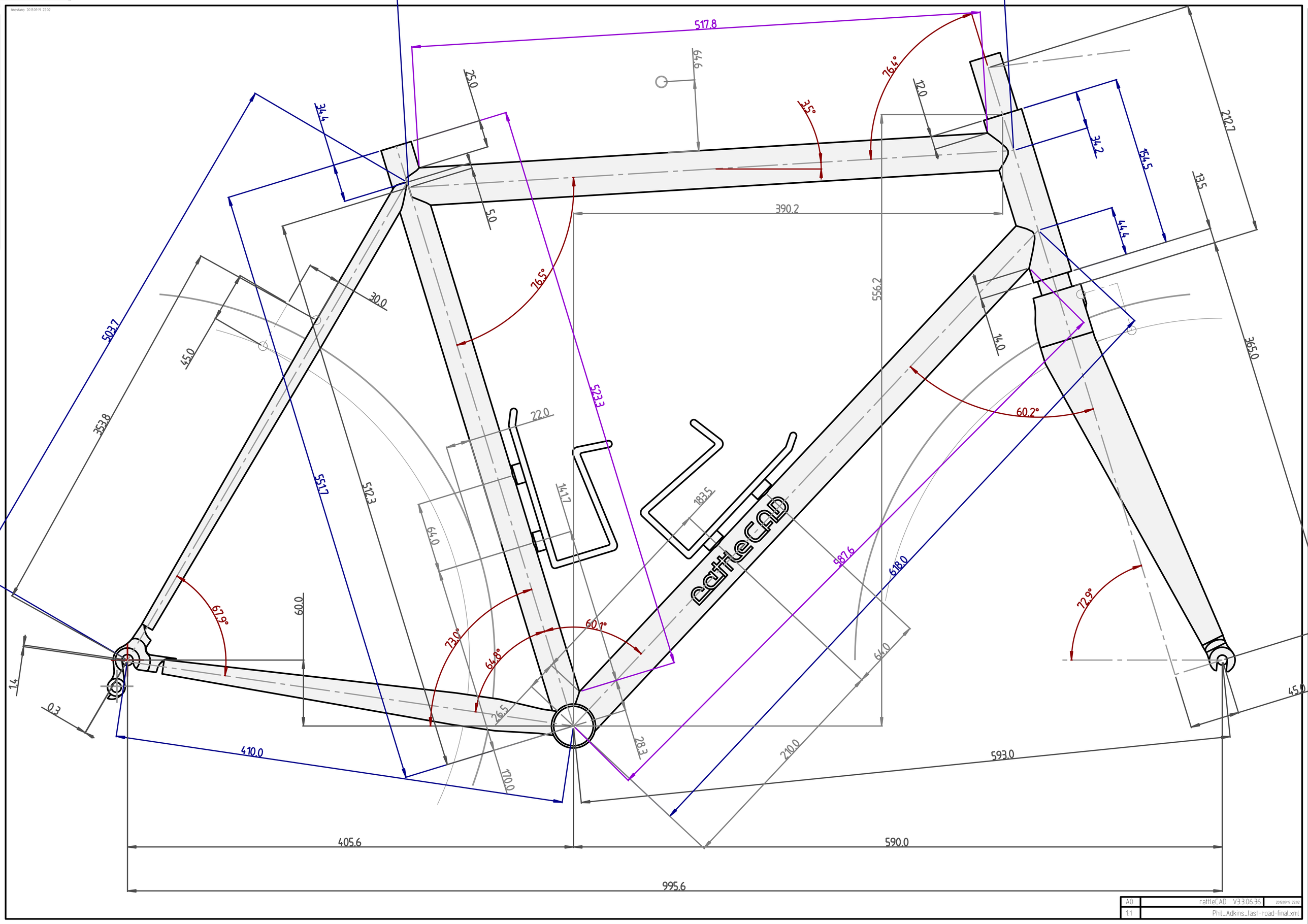


| | | |
|---|---|---|
| A0 | rattleCAD V3.3.06.36 | 2018.09.19 22:02 |
| 1:1 | Phil_Adkins_fast-road-final.xml | |

timestamp 2019.09.19 22:02

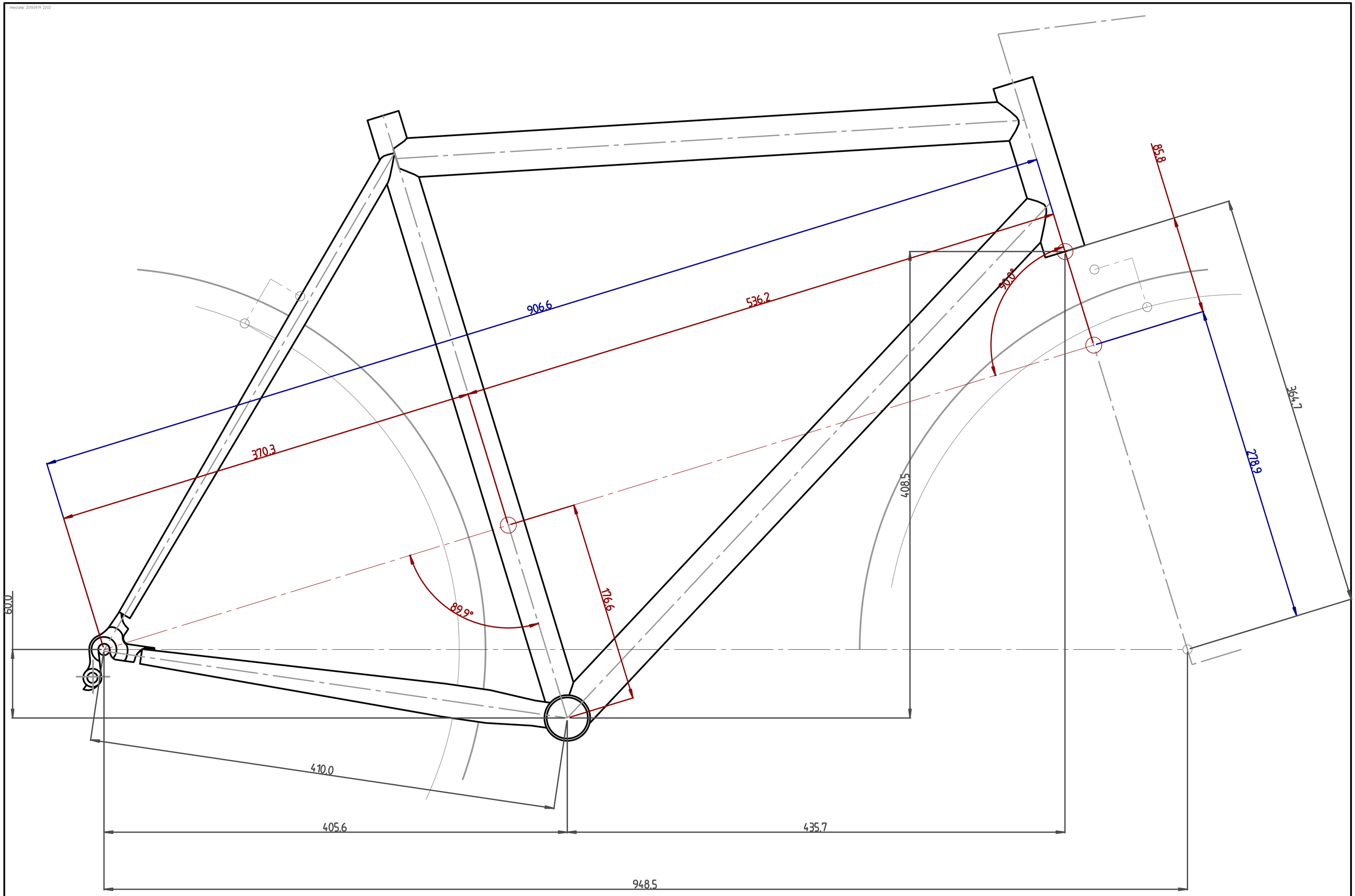


Angle 90.0° 90°0'
Angle 89.9° 89°54'

| | | |
|---|---|---|
| A0 | rattleCAD V3.3.0.6.36 | 2019.09.19 22:02 |
| 1:1 | <- rattleCAD -> Phil_Adkins_fast-road-final.xml | |